Robotic arm
Hardware revision v0.1

Circuit revision: v1.0

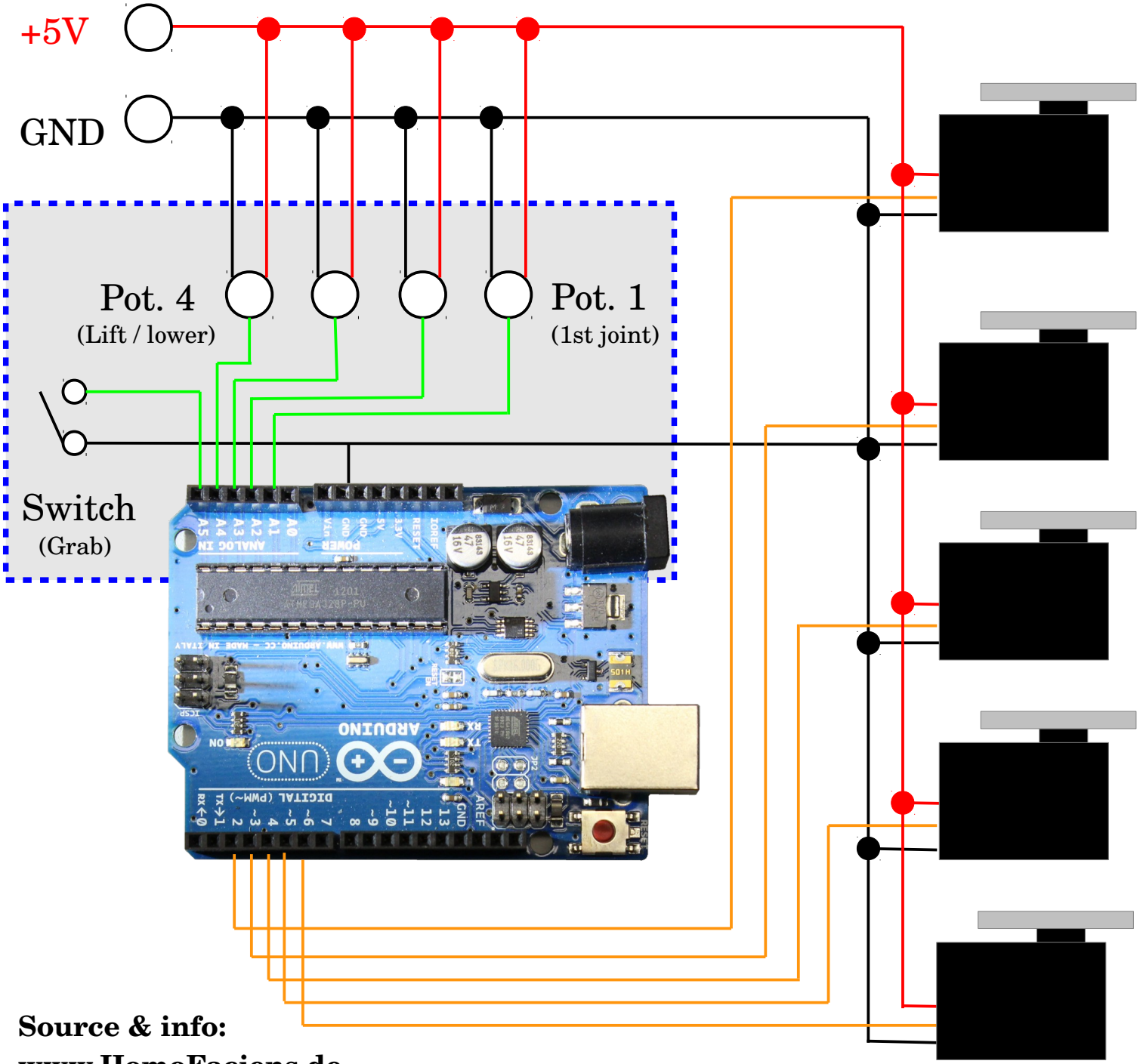

Servo 1 (first pivot axis):
Control line to Arduino pin 2

Servo 2 (second pivot axis):
Control line to Arduino pin 3

Servo 3 (third pivot axis):
Control line to Arduino pin 4

Servo 4 (lift/lower):
Control line to Arduino pin 5

Servo 5 (continuous rotation, grab):
Control line to Arduino pin 6

Source & info:
www.HomoFaciens.de

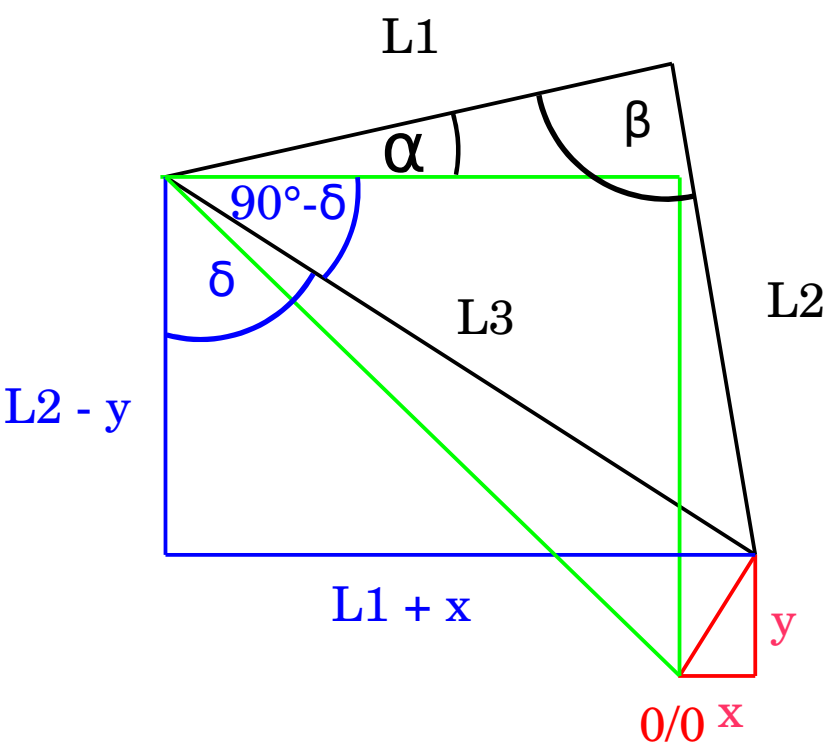
L1
α
β
90°-δ
δ
L3
L2
L2 - y
L1 + x
y
0/0
x